AA45 Concealed Closer
Fitting Instructions

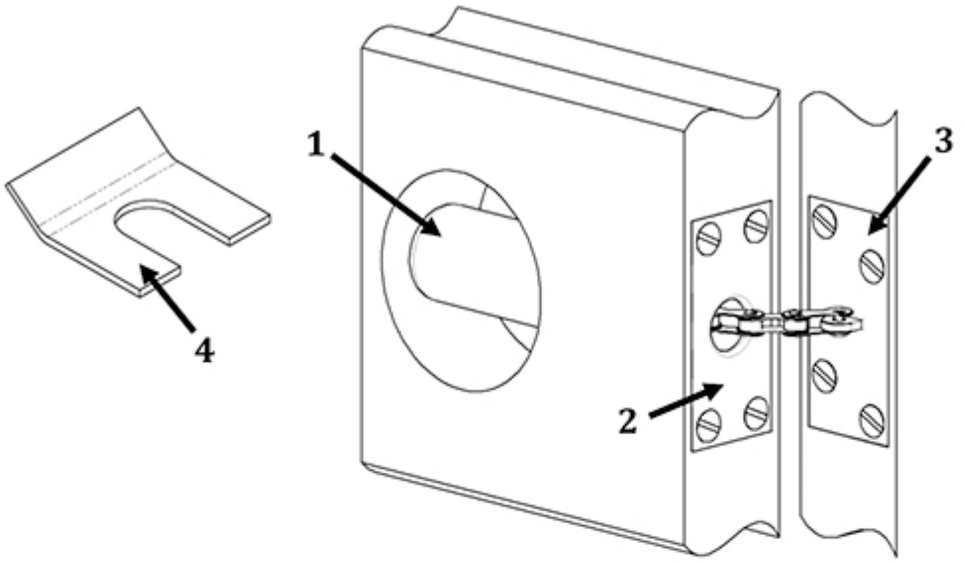

Select the best fitting position for your door.

1. **Cylinder.** Mark inner door edge for drilling of 1" diameter hole. It is important that the hole should not be less than 5¾" deep.
2. **Cylinder Plate.** Mark out and recess cylinder plate flush with door edge. Insert cylinder ensuring that it is free and fix plate with screws provided. Adjust spring tension if necessary. (See Note A). Close door gently so that anchor plate marks out door jamb.
3. **Anchor Plate.** Turn anchor plate 90 degrees to cylinder plate. Withdraw to approximately 1½"and insert template (4).
4. **Template.** Insert template between chain links. Release anchor plate so that it is freely suspended. Recess anchor plate as for cylinder plate (2) and fix with screws provided.

Note A: Adjusting Procedure

1. Fit template (4) as near to cylinder plate (2) as possible.
2. Remove anchor plate (3).
3. Turn anchor plate *clockwise to increase tension, anti-clockwise to decrease tension.*
4. Re-fix anchor plate (3). Remove template (4).

To provide automatic closure of light and medium weight internal doors weighing up to 112lb (50.8kg) except those fitted with rising butt hinges, parliament or projecting hinges or where limited air displacement conditions exist.
Suitable for use on fire-resisting doors subject to approval by appropriate fire authorities.