GEZE TS 1500

Link arm door closer for single-leaf doors with a leaf width of up to 1100 mm

TS 1500 overhead door closer is suitable for single-leaf doors with a leaf width of up to 1100 mm. The closing speed and hydraulic latching action can be adjusted. There are two different closing force settings, which can be selected simply by turning the bearing block for the link arm: 'Weak' closing force (size 3 acc. to EN 1154) for door leaf widths of up to 950 mm and "strong" closing force (size 4 acc. to EN 1154) for door leaf widths of up to 1100 mm. The door closer is available with an optional mounting plate. This makes it suitable for left and right single-action doors without the need for conversion.

Special version:

- GEZE TS 1500 with hold-open linkage
  featuring adjustable hold-open angle of between 70° and 150°

GEZE TS 1500

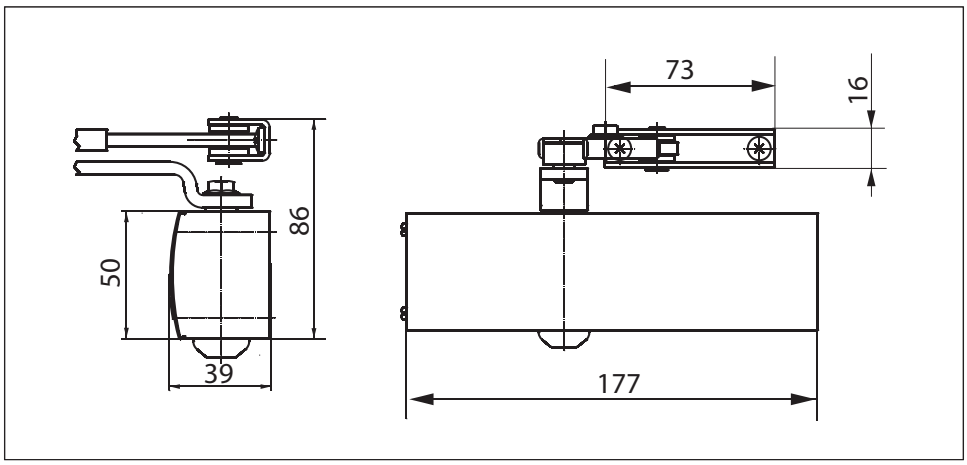

Application range

- For internal doors
- For single-action doors, leaf width of up to 1100 mm
- Compatible with left-hand and right-hand doors without the need for conversion
- Standard mounting on door leaf, hinge side; transom mounting on opposite hinge side also possible

Closer specifications

Product features	**GEZE TS 1500 closer**
Closing force to EN1154	3/4
Leaf width recommended up to	1100 mm
Identical version DIN-L and DIN-R	●
Product tested in acc. with	Door closer tested in acc. with EN1154
Length	177 mm
Installation depth	39 mm
Height	50 mm

Functions	
Adjustable closing force	● Via mounting
Adjustable closing speed	●
Adjustable latching action	● Via valve
Integrated back check	○
Closing force adjustment position	Mounting position

● = yes
○ = no

Door leaf mounting/hinge side TS 1500

View

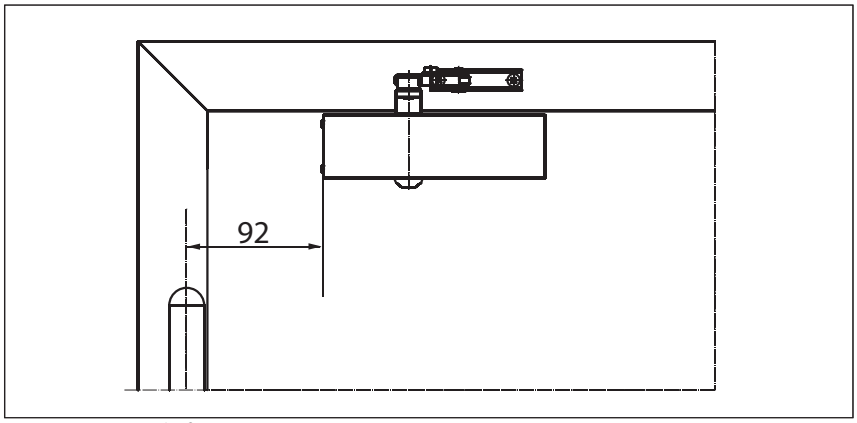

Mounting example for GEZE TS 1500

Direct mounting

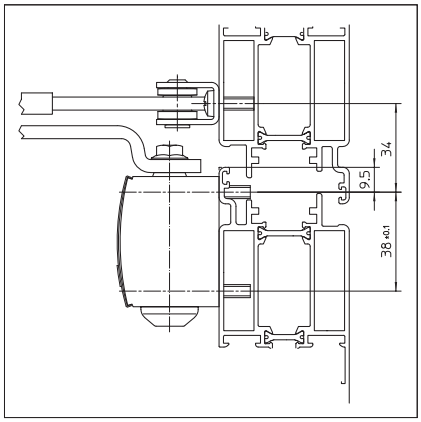

Cross section = direct mounting

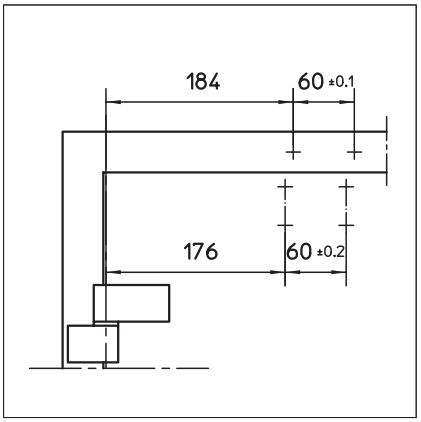

Fitting dimensions for left-hand door

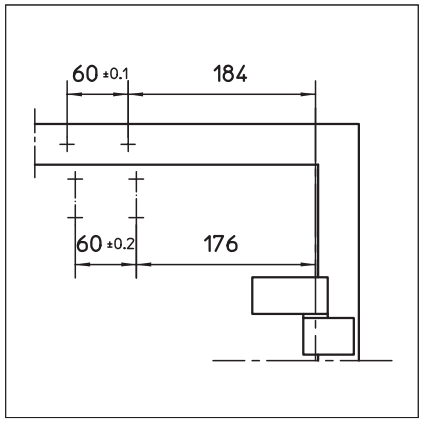

Fitting dimensions for right-hand door

Mounting with mounting plate

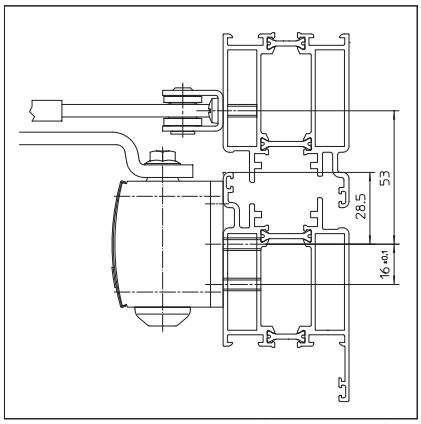

Cross section = mounting with mounting plate

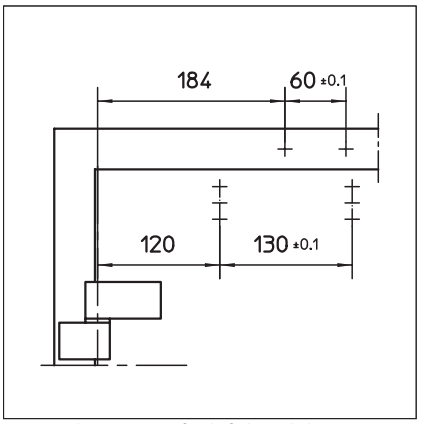

Fitting dimensions for left-hand door

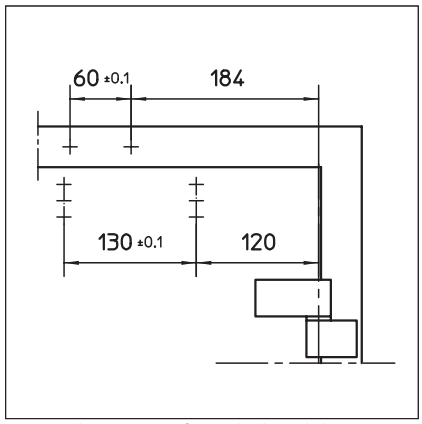

Fitting dimensions for right-hand door